DIN RAIL BATTERY SERIES

DIN RAIL UPS SERIES

All the patents are held accountable counterfeiting.

Features

DIMENSIONS:100(H)*110(D)*120(W)mm
WEIGHTS: 1805g

- **the Replacement of traditional UPS**
- **Din Rail/ Screw Mounting Dual Purpose**
- **Convection cooled**
- **UPS Designed**
- **Battery Discharge Protection with Low voltage**
- **1A Charge (Low voltage protection active)**
- **the Extending Connection of Battery Capacitance**
- **Output Reverse Protection**
- **(Option) 3A Auxiliary Power Output**
- **Fuse replacement while short circuit**
- **RDY signal of Isolation of un-normal voltage (1A of the relay connection)**
- **Good to take with Reign's back up series**

Detail specifications (Battery Inside)

MODEL	I/P Charger (Current Limit function)	I/P voltage	Battery Capacitance	Low Voltage Protection	Charging Current	O/P fuse.	O/P Range	Axu. O/P voltage	Axu. O/P current
BPB1202D-05	13.8V	V1: +12V	2.4A/ Hrs	10.5VDC	1 A	15A	10.5V~ 13.8VDC	5 V	3A
BPB2401D-05	27.6V	V1: +24V	1.2A/ Hrs	21VDC	1 A	15A	21V~ 27.6VDC	5 V	3A
BPB2401D-12	27.6V	V1: +24V	1.2A/ Hrs	21VDC	1 A	15A	21V~ 27.6VDC	12V	3A

* the Axu. O/P will cut off when the protection of low voltage is activity
* the fuse of O/P and the external battery which from factory is 15 Amp.
* the BPB series contains lead-acid batteries, which is lead products

Rdy Connection

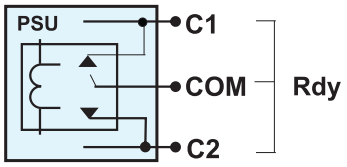

Please Choose Fit Function,
And Fill In The Blank With Suitable Words.
Order Model:BPB1202D-XX
XX means the Aux Output Voltage. such as 5V,
the item number will be BPB1202D-05

Battery Charger Connection

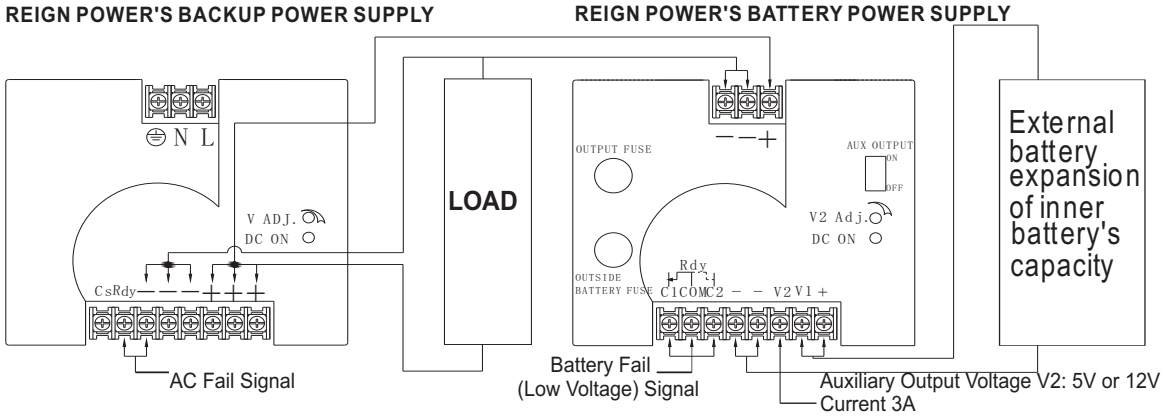

EMC Standards

EN55022 CLASS B,EN55024
EN61000-3-3, IEC61000-4-2
IEC 61000-4-3, IEC61000-4-4
IEC 61000-4-5, IEC61000-4-6
IEC 61000-4-8, IEC61000-4-11

Safety Standards

UL 60950 Meet
CSA 60950 Meet
CE Marking

Environments

Operating Temperature	-15 ~ 50°C, Ambient
Operating Humidity	5 ~ 95% RH, No Condensing
Storage Temperature	-20 ~ 85°C, Ambient
Vibration	2G, 10~500Hz, 3 axes

1.Reign Power reserve the right to change specifications at any time without notice.

WEB : http://www.switching-powers.com
E-mail : rp21003f@ms7.hinet.net
Tel : 886-2-22997550
Fax : 886-2-22997596

REIGNPOWER S.M.P.S